MOST COMMON AVAILABLE OPTIONS:

- -SINGLE PHASE TEFC MOTOR
- -SANITARY MOTOR
- -EXPLOSION PROOF MOTOR
- -ALTERNATE SEALING OPTIONS
- -VAPOR SEALS, HIGH OR LOW PRESSURE STUFFING BOXES, SINGLE OR DOUBLE MECHANICAL SEALS
- -TRICLAMP MOUNT
- -ALTERNATE IMPELLER SIZES AND TYPES
- -SANITARY FINISHES

ITEM	DESCRIPTION
1	MOTOR - 230/460/60, THREE PHASE, TEFC STANDARD, INVERTER DUTY (10:1), PAINTED FINISH
2	GEARBOX - WORM DRIVE, OUTPUT SPEED PER ORDER
3	PEDESTAL - MOUNTING/SEAL PER ORDER
4	SHAFT - MATERIAL AND SIZE PER ORDER
5	IMPELLER - STAINLESS STEEL, SIZE, STYLE, & QTY PER ORDER

DIMENSIONS NOTED ARE APPROXIMATE AND ARE BASED ON STANDARD MIXER SELECTION.
PLEASE CONTACT FUSION FOR EXACT DIMENSIONS.

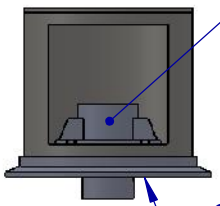

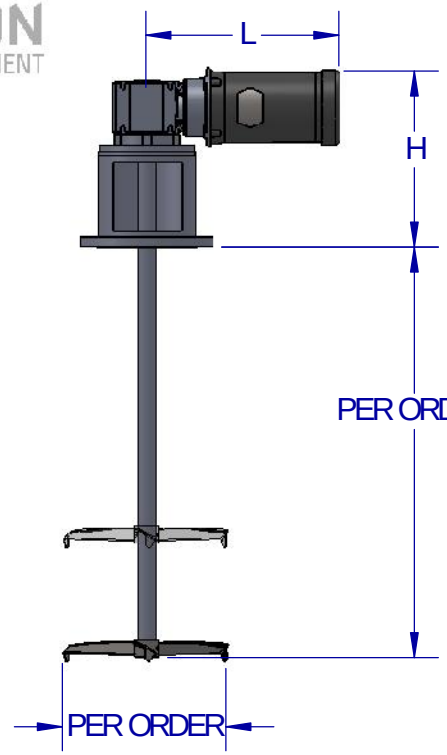

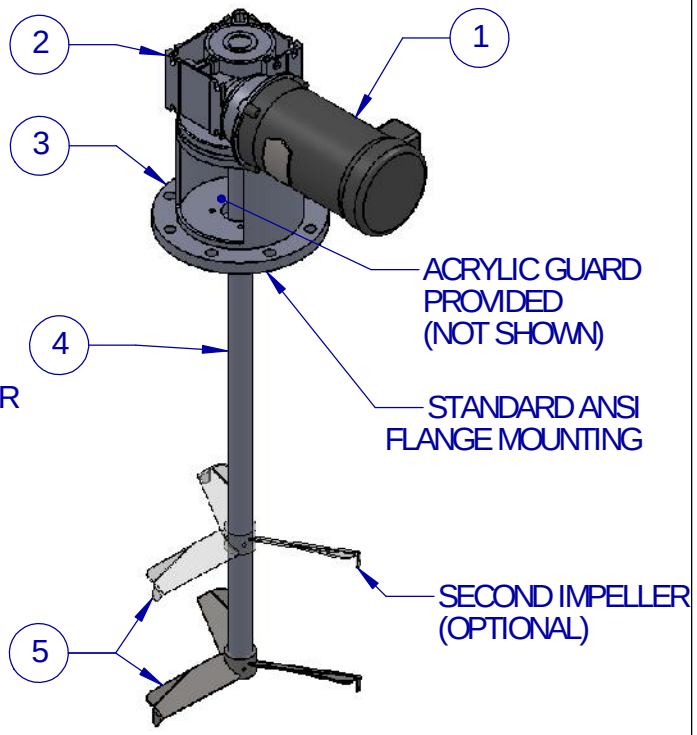

DIM	FW-1F	FW-2F	FW-3F	FW-4F	FW-5F
DIM H	13.83"	14.24"	14.64"	16.29"	16.79"
DIM L	16.81"	17.20"	17.60"	18.67"	19.18"

SEAL TYPE	NOTES
LIP SEAL	SINGLE, DOUBLE, VITON, FDA RULON, & MORE
STUFFING BOX	LOW PRESSURE (15 PSI) OR HIGH PRESSURE (150 PSI)
MECHANICAL SEAL	SINGLE, DOUBLE, FLOWSERVE, CHESTERTON, ROPLAN, & MORE

TYPICAL IMPELLER OPTIONS

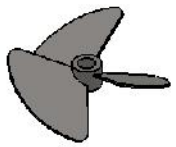
BIOPROP

PF3 HYDROFOIL

PBT (PITCH BLADE TURBINE)

RETREAT

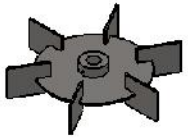
RUSHTON

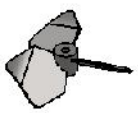
PV3 PROP

	NAME	DATE
DRAWN	JDF	5/1/14
CHECKED	PIC	5/1/14

PROPRIETARY AND CONFIDENTIAL

THE INFORMATION CONTAINED IN THIS DRAWING IS THE SOLE PROPERTY OF FUSION FLUID EQUIPMENT LLC. ANY REPRODUCTION IN PART OR AS A WHOLE WITHOUT THE WRITTEN PERMISSION OF FUSION FLUID EQUIPMENT LLC IS PROHIBITED.

WHILE FUSION FUSION FLUID EQUIPMENT LLC STRIVES TO MAINTAIN THE INTEGRITY OF A DESIGN AS APPROVED, FUSION FLUID EQUIPMENT LLC RETAINS THE RIGHT TO MAKE MODIFICATIONS DURING THE MANUFACTURING PROCESS TO IMPROVE FIT, FORM, AND FUNCTION OF THE DESIGN WITHOUT CUSTOMER NOTIFICATION OR CONSENT.

UNLESS OTHERWISE SPECIFIED:
DIMENSIONS ARE IN INCHES.
NO TOLERANCE IS IMPLIED.
DO NOT SCALE DRAWING

TITLE: FUSION FLOW FW-F
TOP ENTRY FLANGE MOUNT MIXER
WORM DRIVE CLOSED TANK

SIZE	DWG. NO.	REV
A	SALES-FW-#F	A

SCALE: 1:16 | WEIGHT: | SHEET 1 OF 1